P70 evo

1/3

03/2019

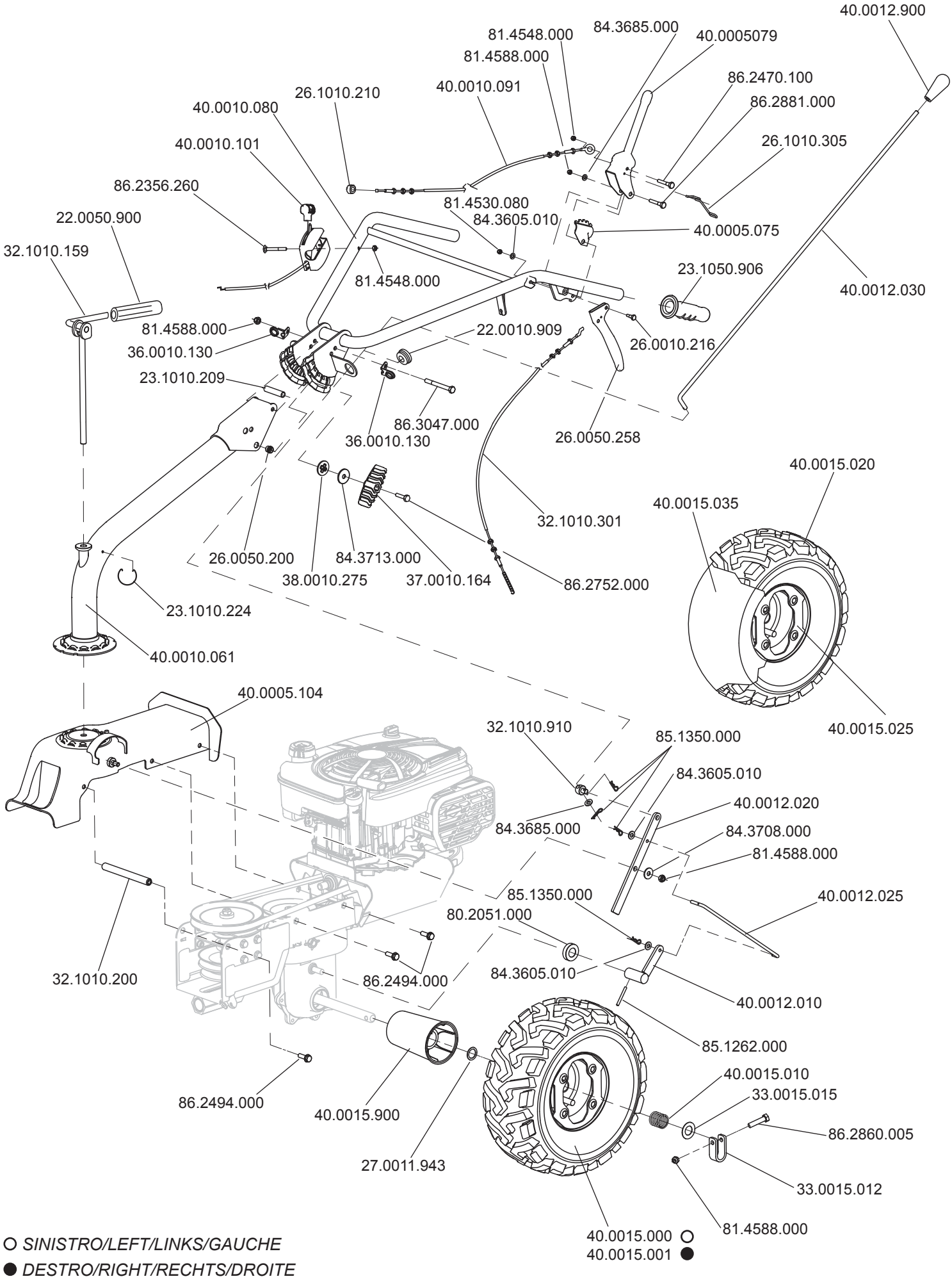

○ *SINISTRO/LEFT/LINKS/GAUCHE*

● *DESTRO/RIGHT/RECHTS/DROITE*

P70 evo

2/3

03/2019

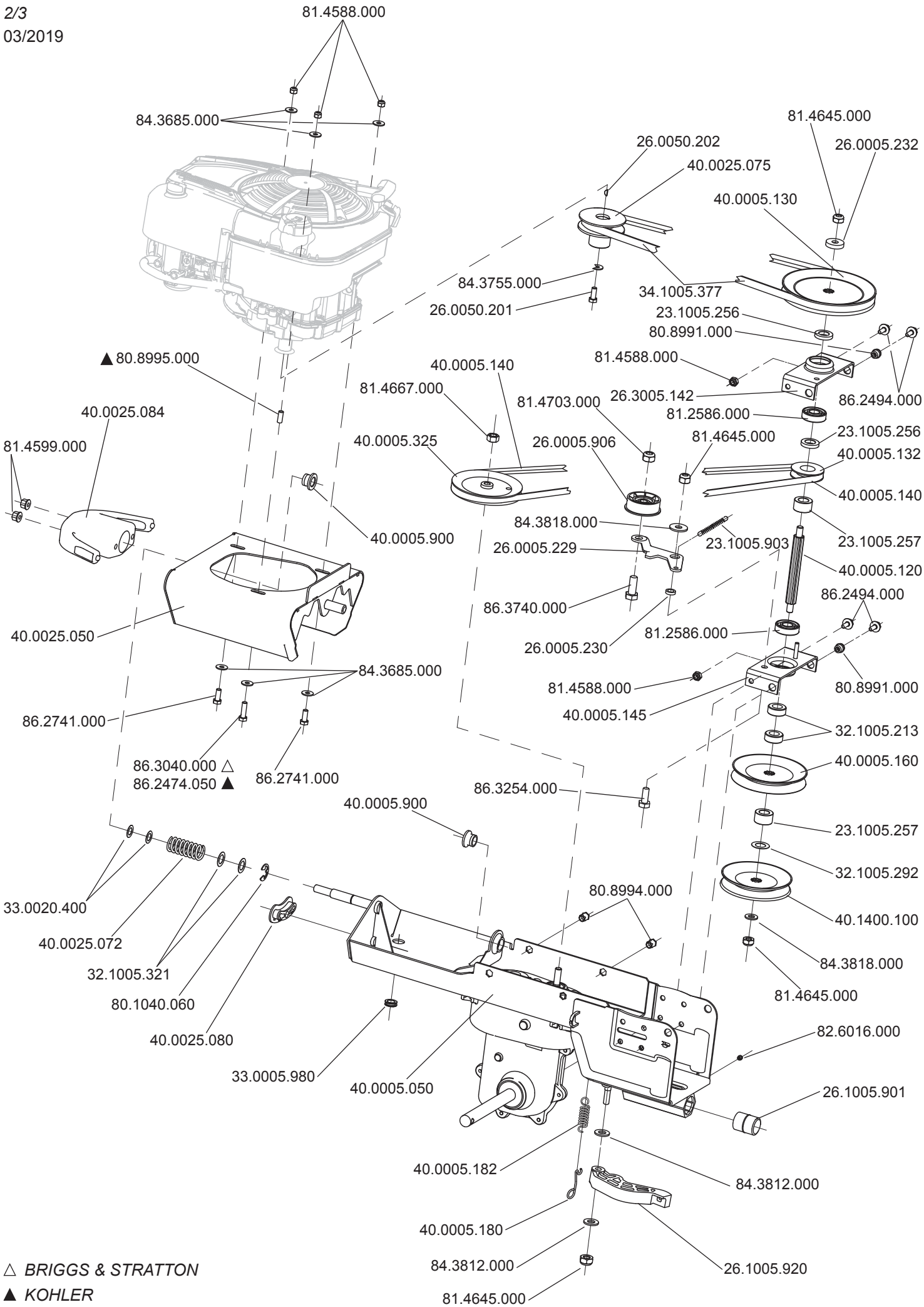

△ *BRIGGS & STRATTON*

▲ *KOHLER*